THE NETHERLANDS
(N E D E R L A N D)

E4

COMMUNICATION

Concerning [1]:

- approval granted
- ~~approval extended~~
- ~~approval refused~~
- ~~approval withdrawn~~
- ~~production definitely discontinued~~

of a vehicle type with regard to the protection of the occupants of the cab of a commercial vehicle pursuant to Regulation number 29.

Approval number: E4*29R03/05*0264*00

1.	Trade name or mark of the vehicle	: KYC
2.	Vehicle type	: V7EV
3.	Manufacturer's name and address	: Chongqing Changan Kuayue Commercial Vehicle Co.,Ltd. 117 Juye Road, Jiulong Industrial Park C, Gaoxin District, 400080 Chongqing China (PRC)
4.	If applicable, name and address of the manufacturer's representative	: DHM SRL Via Trieste 60, 37135 Verona (VR), Italy
5.	Brief description of the cab's design and method of attachment	: See Annex B page 7 ~ 17 in the information document
6.	Vehicle submitted for approval on	: Dec. 6th, 2023
7.	Technical service responsible for conducting approval tests	: Hestocon Certification Services B.V. Lijndonk 4 Unit 10 4825 BG Breda Netherlands

P.O. Box 777
2700 AT Zoetermeer
The Netherlands

Tel. + 31 79 345 83 02
E-mail typeapproval@rdw.nl
www.rdw.nl

Type-approval Department

8.	Date of test report issued by that service	:	Jun. 6th, 2024
9.	Number of test report issued by that service	:	ZCF-R029-24HGZ0558-01
10.	Approval	:	granted/~~refused~~/~~extended~~/~~withdrawn~~ (1)
11.	Position of approval mark on the vehicle	:	Print on a label next to the statutory plate
12.	Place	:	Zoetermeer
13.	Date	:	5 July 2024
14.	Signature	:	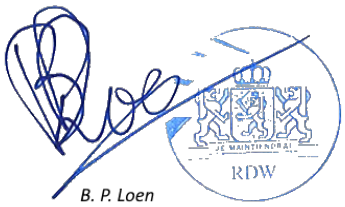

The list of documents deposited with the Type Approval Authority which has granted approval is annexed to this communication and may be obtained on request.

(1) Strike out what does not apply.

Hestocon Certification Services b.v.

Headquarters:

Hestocon Certification Services B.V.
Lijndonk 4 Unit 10
4825 BG Breda
Netherlands

Version: R029-S03S05C00R00

UN Regulation No. 29
Concerning the approval of motor vehicles with regard to protection of the occupants of the cab of a commercial vehicle including all Amendments up to Series 03 Supplement 05

Manufacturer information

Manufacturer	:	Chongqing Changan Kuayue Commercial Vehicle Co.,Ltd.
Make	:	KYC
Type	:	V7EV
Variant(s)/Version(s)	:	See item 1.2. in the information document
Commercial description	:	See item 1.2.1. in the information document
Category	:	N1
Reason for test report	:	New granted approval ~~/ Extension / Correction / Test report only~~
Conclusion	:	The type of vehicle **FULFILS ~~/ DOES NOT FULFIL~~** the technical requirements in application to the above-mentioned regulation. See documentation: V7EV-R29-00 (date: Oct. 10th, 2023)
Tested by	:	Yunxiang Lan / Jie Wang
Test date	:	Dec. 6th, 2023
Test place	:	Test Center of China Automotive Engineering Research Institute Co., Ltd.
Place and date of issue	:	Breda, Jun. 6th, 2024
Revision	:	00



Xiaochuan Zeng
Supervising Inspector



Ken Wang
Authorized Inspector

Approval authority	Land/Country	Designation number
Approval Authority of the Netherlands (RDW)	The Netherlands	RDWT-A7Z-xx
Approval Authority of Ireland (NSAI)	Ireland	00051

* THE PRESENTED RESULTS REFER ONLY TO THE TESTED SAMPLE
* THE PARTIAL REPRODUCTION OF THIS REPORT WITHOUT THE PERMISSION OF HCS IS COMPLETELY FORBIDDEN
* COPYRIGHTS ©2017 HCS B.V. ALL RIGHTS RESERVED.

List of contents

- Reason for extension / correction : See details in page 3

- Used test equipment : See details in page 3

- Vehicle specification : See details in page 4

- Photograph : See details in page 4 to 5

- Test requirements and Results : See details in page 6 to end of document

Conformity statement

Tests were carried out in consideration of worst-case selection principle and cover the versions as mentioned as in the test report.

Worst case selection principle

The vehicle with internal combustion engine has worst structure of front parts was chosen to test to cover all the variants.

Remarks

1. The vehicle is category N1 and it is a van vehicle has not a separate cab, so only the test A is required by the Regulation.
2. The vehicle type is category N1 derived from M1. According to paragraph 5.1.2. of the Regulation, the vehicle approved to Regulation No. 94 could be considered to have satisfied with the requirements on frontal impact (test A). The test results refer to type approval with number: E4*94R04/02*0622*00.
3. The vehicle has two types of powertrain (PEV and ICE), and each of them fitted with the same cab and interior arrangement and chassis frame. Meanwhile, their cabs have the same manner of attachment to the chassis frame.
Regarding the front structure, the vehicle with internal combustion engine has worst structure of front parts. So it was chosen as the worst case.
(See the following pictures).



PEV



ICE

* THE PRESENTED RESULTS REFER ONLY TO THE TESTED SAMPLE
* THE PARTIAL REPRODUCTION OF THIS REPORT WITHOUT THE PERMISSION OF HCS IS COMPLETELY FORBIDDEN
* COPYRIGHTS ©2017 HCS B.V. ALL RIGHTS RESERVED.

Reason for Extension / Correction

Not applicable

Used test equipment

Not applicable

* THE PRESENTED RESULTS REFER ONLY TO THE TESTED SAMPLE
* THE PARTIAL REPRODUCTION OF THIS REPORT WITHOUT THE PERMISSION OF HCS IS COMPLETELY FORBIDDEN
* COPYRIGHTS ©2017 HCS B.V. ALL RIGHTS RESERVED.

Vehicle Specification

VIN of tested vehicle:	See type approval with No.: E4*94R04/02*0622*00
Tested variant(s) / version(s):	See type approval with No.: E4*94R04/02*0622*00
Front Impact Test (Test A):	~~Yes /~~ No (1) The front impact test (test A) was covered by type approval with No.: E4*94R04/02*0622*00
Front Pillar Impact Test (Test B):	~~Yes /~~ No (1)
Roof Strength Test (Test C):	~~Yes /~~ No (1)
Cab-over-Engine vehicle:	Yes ~~/ No~~ (1)
Vehicle with separate cab:	~~Yes /~~ No (1)
Securing Vehicles to the Test Bed:	See Test conditions as below
Survival Space Required after the Test(s):	NA. The test results was covered by type approval with No.: E4*94R04/02*0622*00

Photograph:

The test photos refer to type approval with No.: E4*94R04/02*0622*00




Cab overview before impact test




Cab overview after impact test

* THE PRESENTED RESULTS REFER ONLY TO THE TESTED SAMPLE
* THE PARTIAL REPRODUCTION OF THIS REPORT WITHOUT THE PERMISSION OF HCS IS COMPLETELY FORBIDDEN
* COPYRIGHTS ©2017 HCS B.V. ALL RIGHTS RESERVED.



Survival space after test (driver seat)



Survival space after test (passenger right seat)

Test conditions PASS/FAIL/NA

* THE PRESENTED RESULTS REFER ONLY TO THE TESTED SAMPLE
* THE PARTIAL REPRODUCTION OF THIS REPORT WITHOUT THE PERMISSION OF HCS IS COMPLETELY FORBIDDEN
* COPYRIGHTS ©2017 HCS B.V. ALL RIGHTS RESERVED.

Vehicle securing conditions

General instructions for securing

Frontal impact (Test A)	**PASS**
Remark: Test result refer to Type-approval No. E4*94R04/02*0622*00	

Reference Data concerning Seating Positions	**PASS**
Remark: Test result refer to Type-approval No. E4*94R04/02*0622*00	

Test requirements PASS/FAIL/NA

Frontal impact (Test A)	**PASS**
Remark: Test result refer to Type-approval No. E4*94R04/02*0622*00	

Test Results PASS/FAIL/NA

Survival Space Required after the Test(s)	**PASS**
Remark: Test result refer to Type-approval No. E4*94R04/02*0622*00	

----------END OF TEST REPORT---------

* THE PRESENTED RESULTS REFER ONLY TO THE TESTED SAMPLE
* THE PARTIAL REPRODUCTION OF THIS REPORT WITHOUT THE PERMISSION OF HCS IS COMPLETELY FORBIDDEN
* COPYRIGHTS ©2017 HCS B.V. ALL RIGHTS RESERVED.

Statement manufacturer and authorization regarding application

This statement must only be sent with new "00" applications. This applies to both the statements that the application has not been submitted to another authority and the authorization of the applicant. If the authorized party is changed in the meantime (i.e. in case of an extension or correction request), this declaration must be filled in again.

EC & UNECE type-approval number : E4*29R03/05*0264*00

☒ Manufacturer/ ☐ Manufacturer's representative [1]

Company name	: Chongqing Changan Kuayue Commercial Vehicle Co.,Ltd.
Name authorized person	: Xiao Jizhong
Job title	: Technical Manager
E-mail address	: 80409821@qq.com
Address manufacturer	: 117 Juye Road, Jiulong Industrial Park C, Gaoxin District, 400080 Chongqing
Country	: China (PRC)

Statement

Hereby : Xiao Jizhong ,
declares on behalf of the manufacturer : Chongqing Changan Kuayue Commercial Vehicle Co.,Ltd. ,
for the application with type-approval number : E4*29R03/05*0264*00 ,
the following:

a) the manufacturer has not applied for an EC & UNECE type-approval for the same type to any other approval authority, and no other approval authority granted the manufacturer such an approval;
b) no approval authority has refused to grant type-approval of that type;
c) no approval authority has withdrawn type-approval of that type;
d) the manufacturer has not revoked an application for a type-approval of that type.

Authorization regarding handling of this application (if applicable) [2]

Company name	: Hestocon Certification Services B.V.
E-mail address	: info@hcseu.com
Address	: Lijndonk 4, Unit 10, 4825 BG, Breda
Country	: Netherlands

Authorization

By means of this declaration, I : Xiao Jizhong ,
on behalf of : Chongqing Changan Kuayue Commercial Vehicle Co.,Ltd. ,
authorizes : Hestocon Certification Services B.V. ,
to respectively apply for a type-approval with type-approval number:
E4*29R03/05*0264*00 ,
handle all communication concerning this application and receive the type-approval certificate.

Date	Place	Name:
2023/10/10	Chongqing	Chongqing Changan Kuayue Commercial Vehicle Co.,Ltd.

On their behalf, signature : 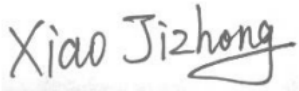

Name : Xiao Jizhong

[1] Mark the specific checkbox.
[2] This authorization only concerns the application procedure and all activities that are directly or indirectly related to this procedure. If and insofar as other procedures, including the lodging of objections, are deemed necessary, a new authorization must be submitted in respect of that specific procedure.

PARTIAL MODEL INFORMATION DOCUMENT NO. V7EV-R29-00

UNIFORM PROVISIONS CONCERNING THE APPROVAL OF VEHICLES WITH REGARD TO THE PROTECTION OF THE OCCUPANTS OF THE CAB OF A COMMERCIAL VEHICLE

(UN Regulation No. 29 Series 03, Suppl. 05)

Vehicle Type : V7EV

Approval History					
Ext. No.	Corr. No.	Date	Approval No.	Remark	Made by
0	-	2023/10/10	Original version	-	Liu Yang
1	-	-	-	-	-
2	-	-	-	-	-
3	-	-	-	-	-
4	-	-	-	-	-
5	-	-	-	-	-

GENERAL

1.			
	Make (trade name of manufacturer)	:	KYC
1.1.			
	Type and general commercial description(s)		
1.2.	Type	:	V7EV
	Variant/version	:	CKS5031XXYVQ6B5BEV, CKS5031XXYVQ6B1BEV, CKS5031XXYPQ6B5BEV, CKS5031XXYPQ6B1BEV, CKS5031XXYVQ6B2BEV, CKS5031XXYPQ6BABEV, CKS5021XXYWQ6B3, CKS5021XXYWQ6B4, CKS5021XXYVQ6B1, CKS5021XXYVQ6B2, CKS5021XXYPQ6B1, CKS5021XXYPQ6B4
	Commercial name(s), if available	:	CKS5031XXYVQ6B5BEV, CKS5031XXYVQ6B1BEV,
1.2.1.			CKS5031XXYPQ6B5BEV, CKS5031XXYPQ6B1BEV, CKS5031XXYVQ6B2BEV, CKS5031XXYPQ6BABEV, CKS5021XXYWQ6B3, CKS5021XXYWQ6B4, CKS5021XXYVQ6B1, CKS5021XXYVQ6B2, CKS5021XXYPQ6B1, CKS5021XXYPQ6B4, V7, V5, V3
	Means of identification of type, if marked	:	4th to 8th digit in the Vehicle Identification Number
1.3.	on the vehicle		
	Location of that mark	:	On the Dashboard;
1.3.1.			On the Manufacturer's statutory plate; On the cross beam under the front right seat.
	Category of vehicle	:	N1
1.4.			
	Name and address of the manufacturer	:	Chongqing Changan Kuayue Commercial Vehicle Co.,Ltd.
1.5.			117 Juye Road, Jiulong Industrial Park C, Gaoxin District 400080 Chongqing China (PRC)
	Name(s) and address(es) of assembly plant(s)	:	Chongqing Chang An Kuayue Automobile Co., Ltd.
1.8.			No.77, Shenming North Road, Wanzhou District, 404000, Chongqing China (PRC)
	Name and address of manufacturer's	:	DHM SRL
1.9.	authorized representative where appropriate		Via Trieste 60, 37135 Verona (VR), Italy
1.10.	Position of approval mark on the vehicle	:	Print on a label next to the statutory plate

2. GENERAL CONSTRUCTION CHARACTERISTICS OF THE VEHICLE

2.1.	Photographs and/or drawings of a representative vehicle	:	See Annex A
2.2.	Dimensional drawing of the whole vehicle	:	See Annex A
2.3.	Number of axles and wheels	:	Axles: 2, wheels: 4
2.6.	Position and arrangement of the engine	:	CKS5021XXYWQ6B3, CKS5021XXYWQ6B4, CKS5021XXYVQ6B1, CKS5021XXYVQ6B2, CKS5021XXYPQ6B1, CKS5021XXYPQ6B4: Engine: front, longitudinal CKS5031XXYVQ6B5BEV, CKS5031XXYVQ6B1BEV, CKS5031XXYPQ6B5BEV, CKS5031XXYPQ6B1BEV, CKS5031XXYVQ6B2BEV, CKS5031XXYPQ6BABEV: Electric motor: rear, transverse
2.7.	Driving cab (cab-over-engine or bonnet)	:	Cab-over-engine
2.8.	Hand of drive: left/right	:	Left-hand drive and right-hand drive

3. MASSES AND DIMENSIONS(IN KG AND MM)(REFER TO DRAWING WHERE APPLICABLE)

3.1. Technically permissible maximum laden mass stated by the manufacturer :

Variants	Laden mass(kg)
CKS5031XXYVQ6B5BEV, CKS5031XXYVQ6B1BEV, CKS5031XXYPQ6B5BEV, CKS5031XXYVQ6B2BEV, CKS5031XXYPQ6BABEV	2520
CKS5031XXYPQ6B1BEV, CKS5031XXYPQ6BABEV	2700
CKS5021XXYWQ6B3, CKS5021XXYWQ6B4	2190
CKS5021XXYVQ6B1, CKS5021XXYVQ6B2	2460
CKS5021XXYPQ6B1, CKS5021XXYPQ6B4	2495

3.2. Technical permissible maximum mass for the front axle or axles of the vehicle :

Variants	Front axle (kg)	Rear axle (kg)
CKS5031XXYVQ6B5BEV, CKS5031XXYVQ6B1BEV, CKS5031XXYPQ6B5BEV, CKS5031XXYVQ6B2BEV, CKS5031XXYPQ6BABEV	1140	1380
CKS5031XXYPQ6B1BEV, CKS5031XXYPQ6BABEV	1150	1550
CKS5021XXYWQ6B3, CKS5021XXYWQ6B4	810	1380
CKS5021XXYVQ6B1, CKS5021XXYVQ6B2	1080	1380
CKS5021XXYPQ6B1, CKS5021XXYPQ6B4	1115	1380

4. CAB

4.1. Type of cab (normal/sleeper/top-sleeper) : Normal

4.2. Material used and method of construction : Steel, by spot welding method

4.3. Door configuration and number of doors : See Annex B

4.4. Drawings of door latches and retention components and their position in the doors : See Annex B

4.5. Number of seats : CKS5031XXYVQ6B5BEV, CKS5031XXYVQ6B1BEV, CKS5031XXYPQ6B5BEV, CKS5031XXYPQ6B1BEV, CKS5021XXYWQ6B3, CKS5021XXYVQ6B1, CKS5021XXYPQ6B1: 2 seats
CKS5031XXYVQ6B2BEV, CKS5031XXYPQ6BABEV: CKS5021XXYWQ6B4, CKS5021XXYVQ6B2, CKS5021XXYPQ6B4: 5 seats

4.6. Coordinates or drawing of the R point : See Annex B

4.7. Detailed description of the cab of the vehicle type including its dimensions, configuration and constituent materials and its attachment to any chassis frame : See Annex B

4.8. Drawings of the cab and those parts of its interior arrangement which have an influence on the residual space : See Annex B

5. STEERING

5.1. Schematic diagram(s) of the steering control(s) : See Annex B

5.2. Range and method of adjustment, if any, of the steering control : Not applicable

List of attachments

Annex	Page	Subject	Drawing number
A	1-3	Views of the vehicle	01-03
B	1	Location of primary reference points and R-point	04
	2	Steering mechanism	05
	3	Steering wheel	06
	4	Front bumper	07
	5	1st row & 2nd row seats	08
	6	The adjustment system and locking system	09
	7	Cab interior view	10
	8	Door and latch ’s position	11
	9	Drawing of van cab with its parts	12
	10	Drawing of van cab with its parts	13
	11	Exploded view of welded assembly structure	14
	12	Exploded view of side structure	15
	13	Exploded view of body frame structure	16
	14	Exploded view of body frame structure	17
	15	Exploded view of front door structure	18
	16	Exploded view of rear door structure	19
	17	Cab attachment	20

Annex to partial model information document no. V7EV-R29-00	Annex A Page 1
Title : Views of the vehicle Type : V7EV	Drawing no. : 01 Directive : - Regulation : 29

Variant: CKS5021XXYWQ6B3, CKS5021XXYWQ6B4

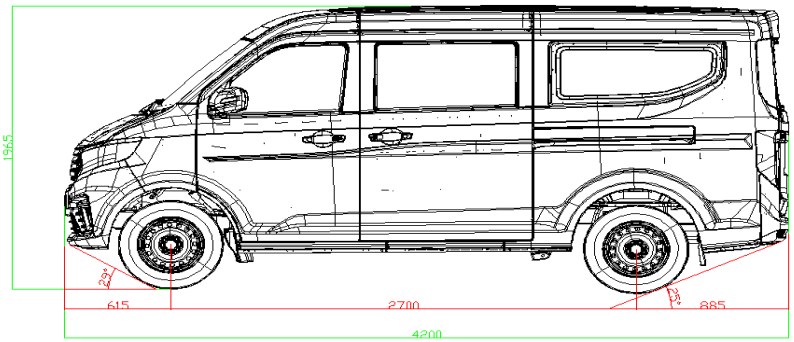

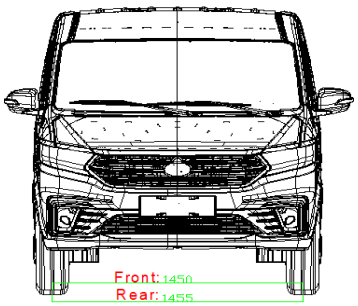

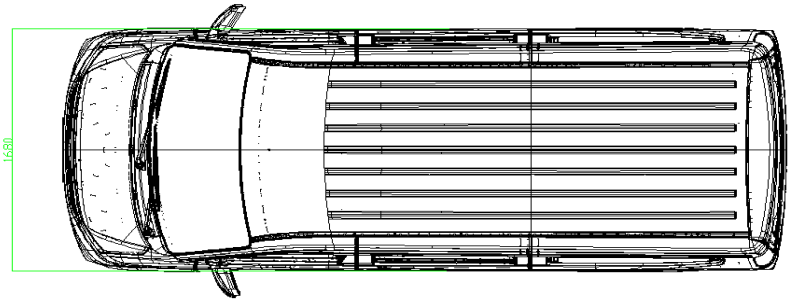

Option 1: Hatchback tail door



Option 2: Hatchback tail door

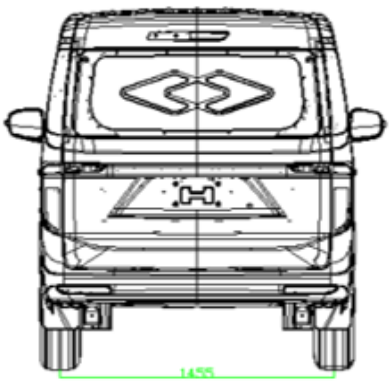

Option 3: Split tail door



Main dimensions

Units: mm

Length	Width	Height	Wheelbase	Front track	Rear track	Front overhang	Rear overhang	Approach angle	Departure angle
4200	1680	1965	2700	1450	1455	615	885	29°	25°

The drawing shows left-hand drive vehicle is symmetrical with right-hand drive vehicle.

Annex to partial model information document no. V7EV-R29-00	Annex A Page 2
Title : Views of vehicle Type : V7EV	Drawing no. : 02 Directive : - Regulation : 29

Variants: CKS5031XXYVQ6B5BEV, CKS5031XXYVQ6B1BEV, CKS5031XXYVQ6B2BEV,
CKS5021XXYVQ6B1, CKS5021XXYVQ6B2

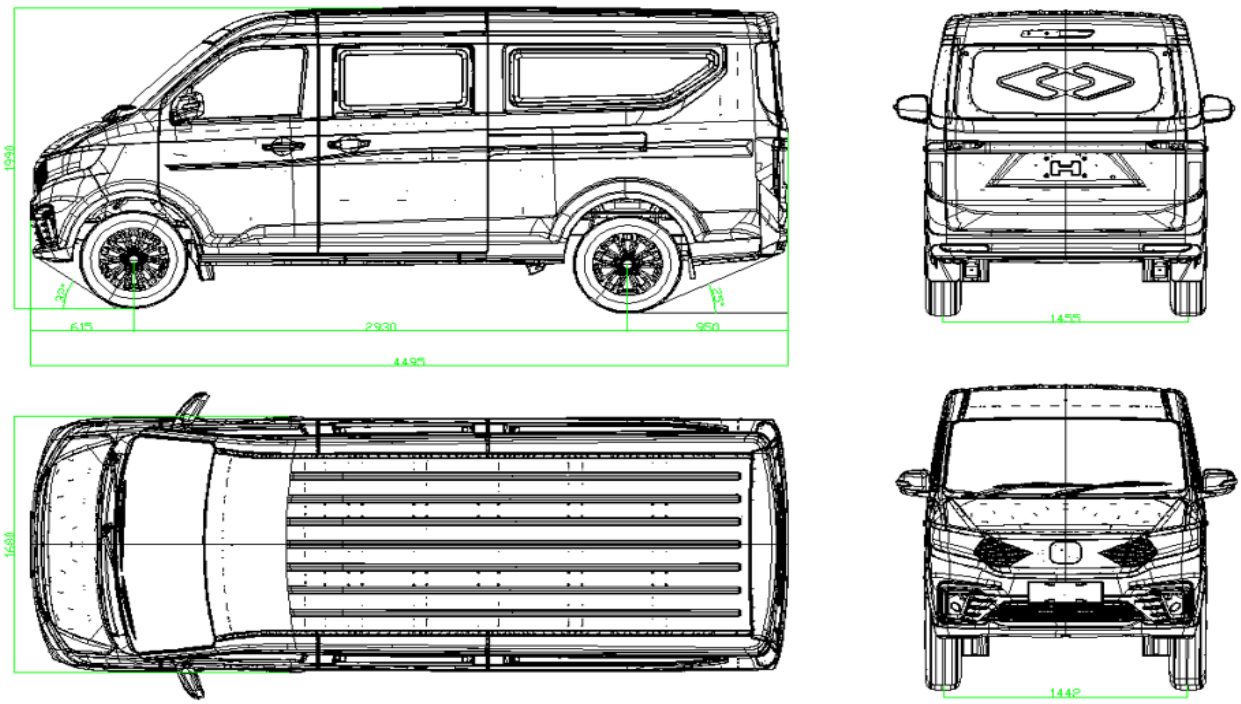

Option 1: Hatchback tail door



Option 2: Hatchback tail door

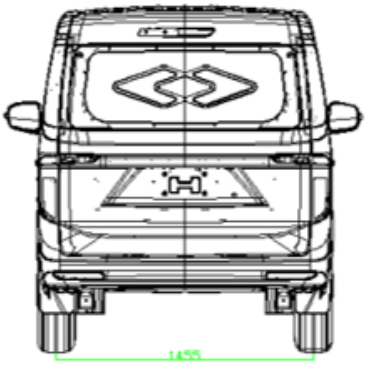

Option 3: Split tail door



Main dimensions

Units: mm

Length	Width	Height	Wheelbase	Front track	Rear track	Front overhang	Rear overhang	Approach angle	Departure angle
4495	1680	1990	2930	1442	1455	615	950	32°	25°

The drawing shows right-hand drive vehicle is symmetrical with left-hand drive vehicle.

Annex to partial model information document no. V7EV-R29-00	Annex A Page 3
Title : Views of vehicle Type : V7EV	Drawing no. : 03 Directive : - Regulation : 29

Variants: CKS5031XXYPQ6B5BEV, CKS5031XXYPQ6B1BEV, CKS5031XXYPQ6BABEV,
CKS5021XXYPQ6B1, CKS5021XXYPQ6B4

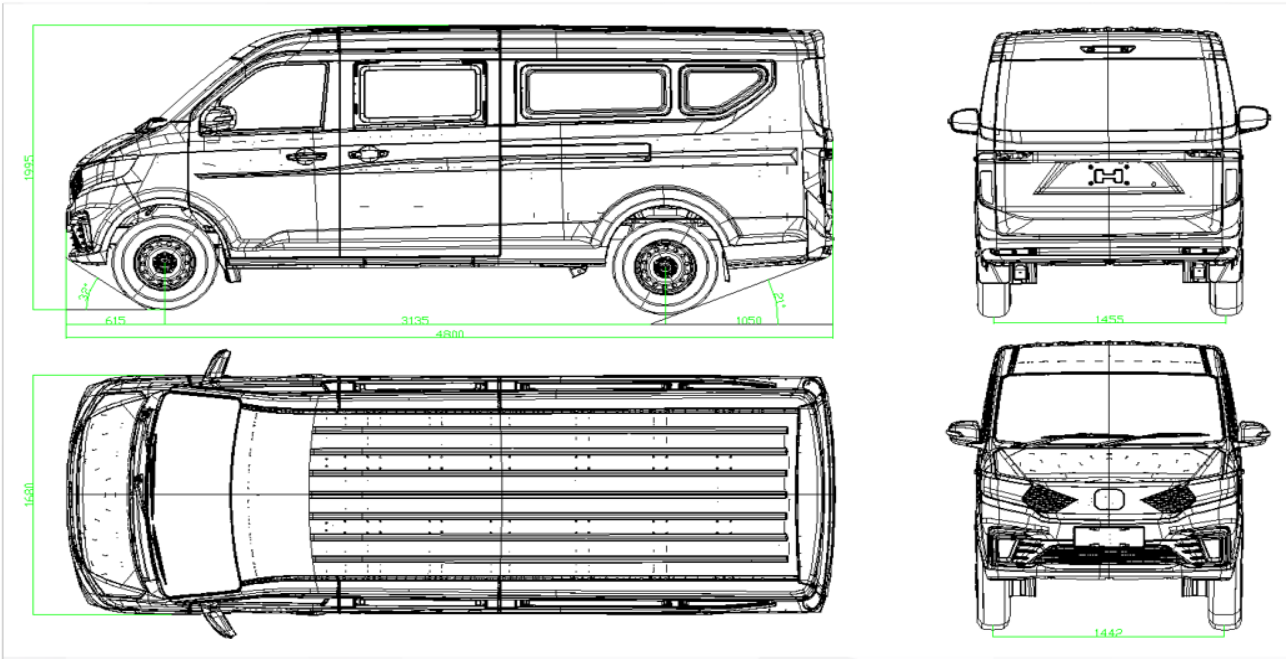

Option 1: Hatchback tail door

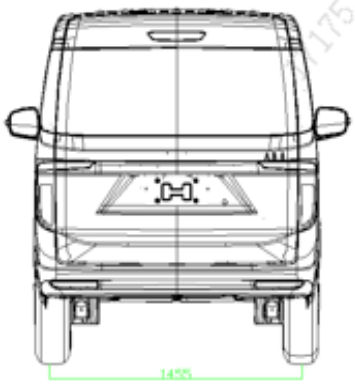

Option 2: Hatchback tail door

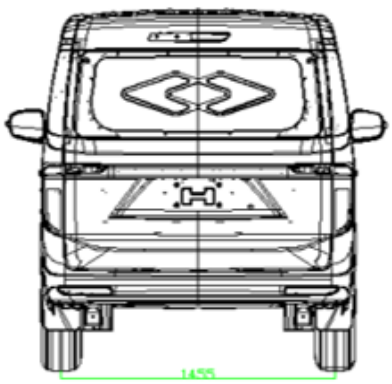

Option 3: Split tail door



Main dimensions

Units: mm

Length	Width	Height	Wheelbase	Front track	Rear track	Front overhang	Rear overhang	Approach angle	Departure angle
4800	1680	1995	3135	1442	1455	615	1050	32°	21°

The drawing shows right-hand drive vehicle is symmetrical with left-hand drive vehicle.

Title : Partial model information document no. V7EV-R29-00	Annex B Page 1
Title : Location of primary reference points and R-point Type : V7EV	Drawing no. : 04 Directive : – Regulation : 29

For 2 seats

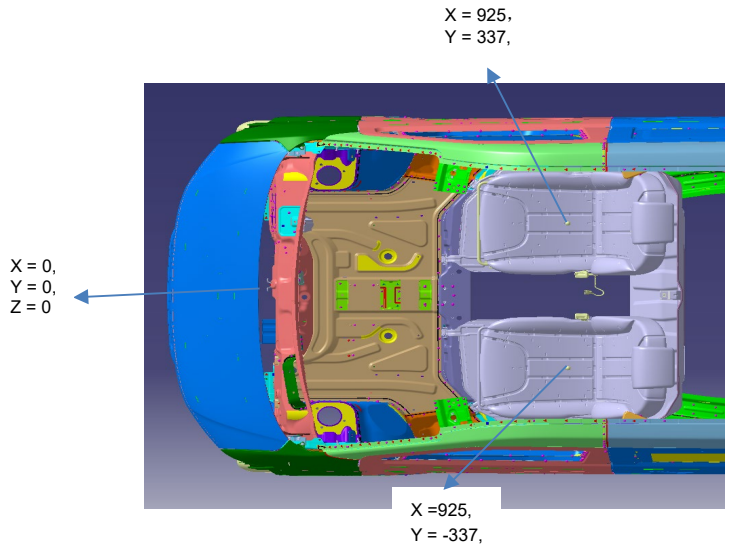

For 5 seats

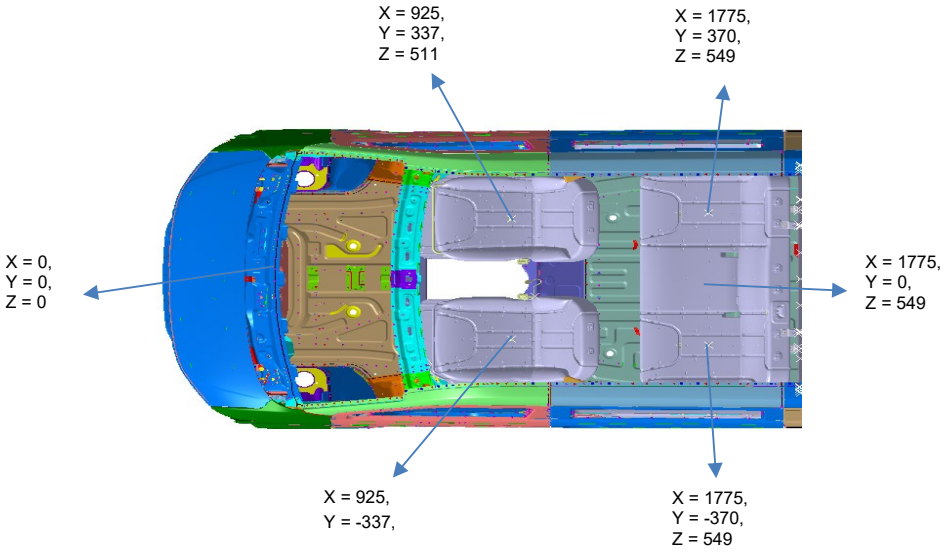

	1st row						2nd row								
	LH			RH			LH			Center			RH		
	X	Y	Z	X	Y	Z	X	Y	Z	X	Y	Z	X	Y	Z
R Point	925	-337	511	925	337	511	1775	-370	549	1775	0	549	1775	370	549



Reference point: Center of upper mounting hole of lockpins on the left B pillar.
X: 1029, Y: -758, Z:604

Origin point:
A horizontal plane offset 260mm downwards from the floor plane, a vertical plane through the center of the front wheels, a vertical plane with the longitudinal center of the vehicle: the intersection of the three planes.

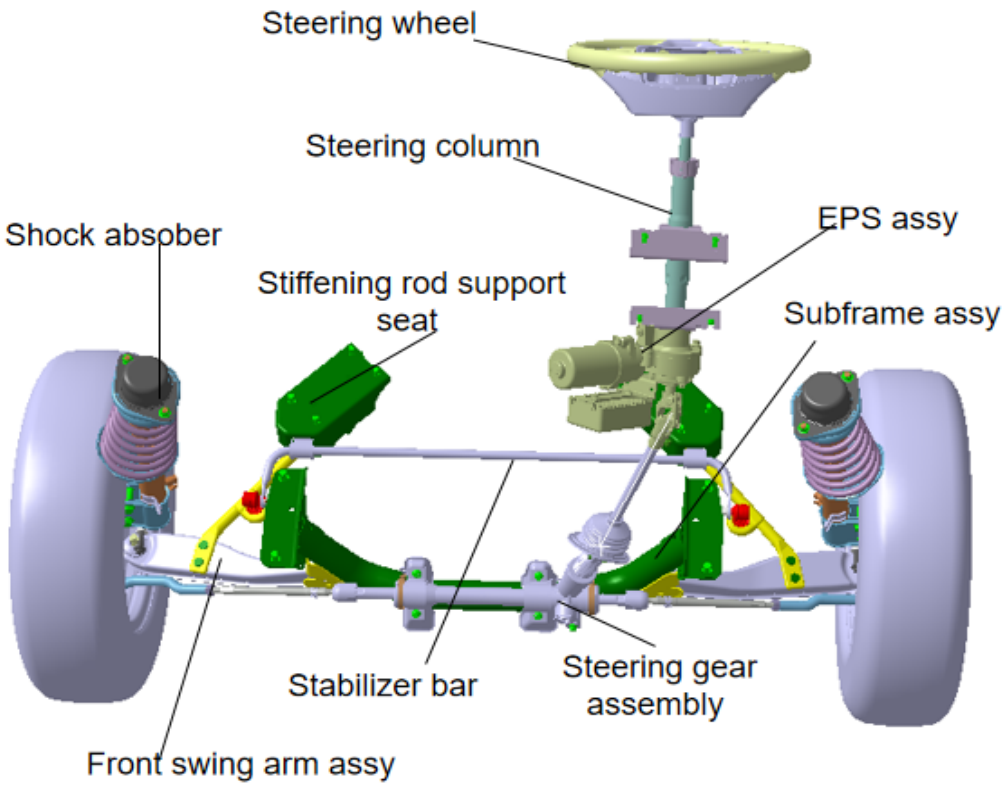
Steering wheel
Steering column
Shock absober
EPS assy
Stiffening rod support seat
Subframe assy
Stabilizer bar
Steering gear assembly
Front swing arm assy

Title : Partial model information document no. V7EV-R29-00	Annex B Page 3
Title : Steering wheel Type : V7EV	Drawing no. : 06 Directive : – Regulation : 29

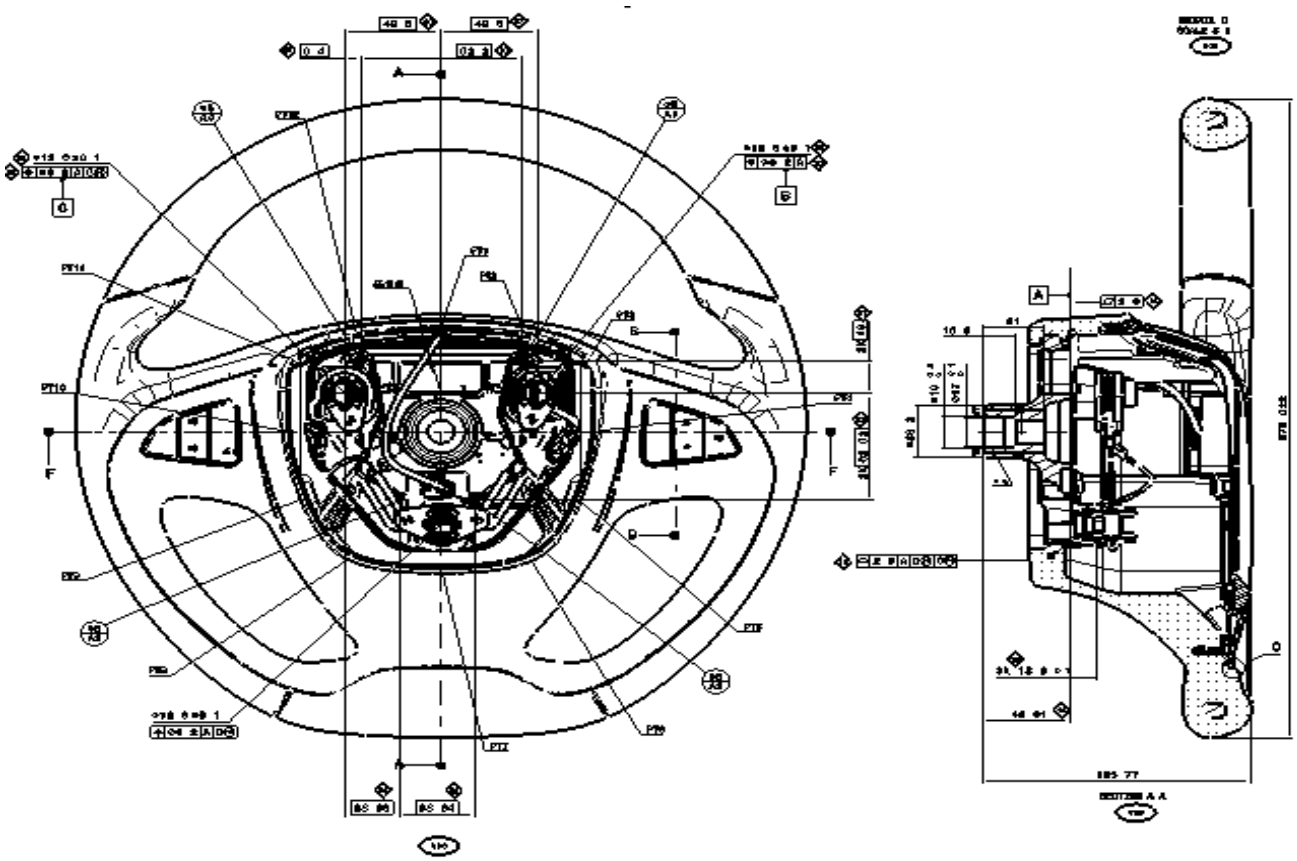

Make: Chengdu worldtech Automotive Safety System Co.,LTD TIANJIN BRANCH
Part No.: ZP040000

For variants: CKS5031XXYVQ6B5BEV, CKS5031XXYVQ6B1BEV,
CKS5031XXYPQ6B5BEV, CKS5031XXYPQ6B1BEV,
CKS5031XXYVQ6B2BEV, CKS5031XXYPQ6BABEV

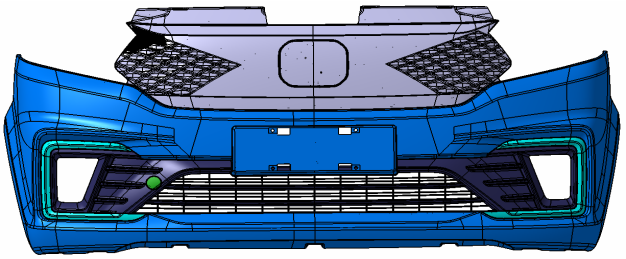

Material: PP Dimension(length*height): 1664*728mm

For variants: CKS5021XXYWQ6B3, CKS5021XXYWQ6B4,
CKS5021XXYVQ6B1, CKS5021XXYVQ6B2,
CKS5021XXYPQ6B1, CKS5021XXYPQ6B4

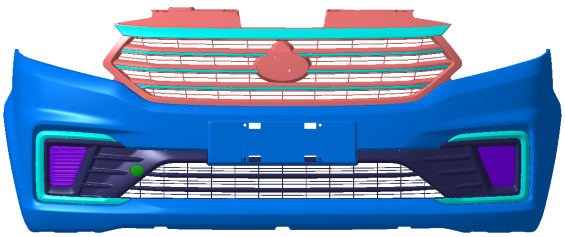

Without front fog lamp

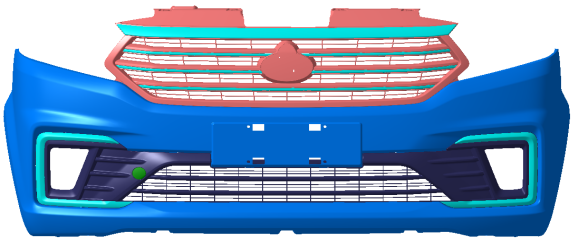

With front fog lamp

Material: PP Dimension(length*height): 1664*728mm

Title : Partial model information document no. V7EV-R29-00	Annex B Page 5
Title : 1st row & 2nd row seats Type : V7EV	Drawing no. : 08 Directive : – Regulation : 29

1st row seats

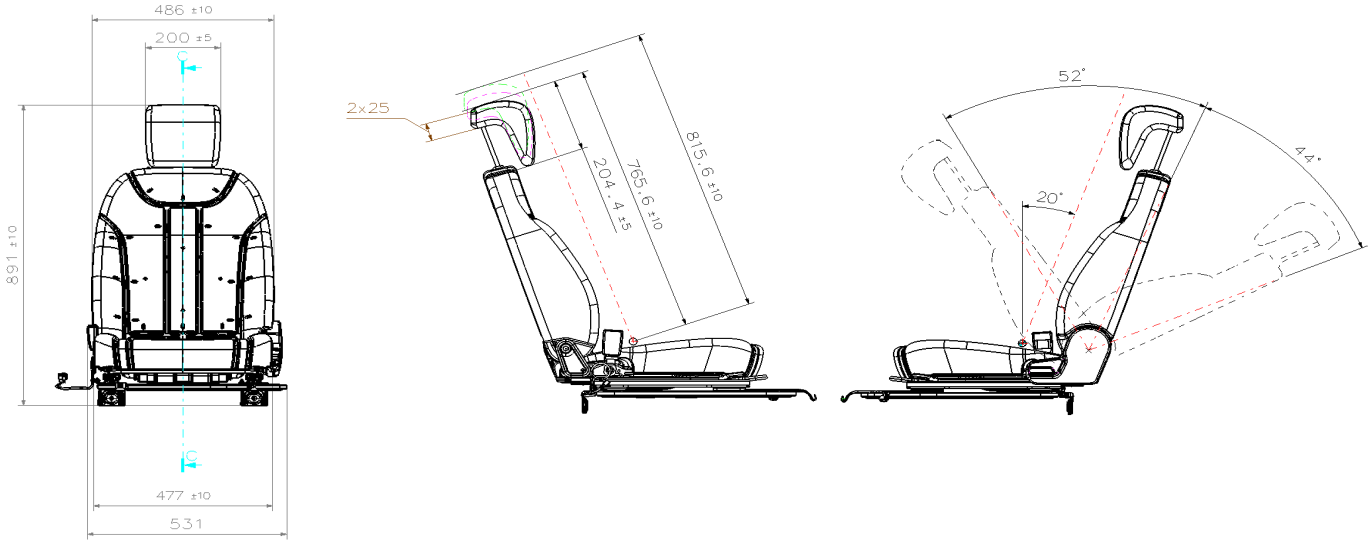

Type: ZY01YDJ0(LH),ZY01YDQ0(RH)
Make: Chongqing Juxian Automobile Components Manufacturing Co., Ltd.
The drawing shows left side seat is symmetrical with the right side.

2nd row seats

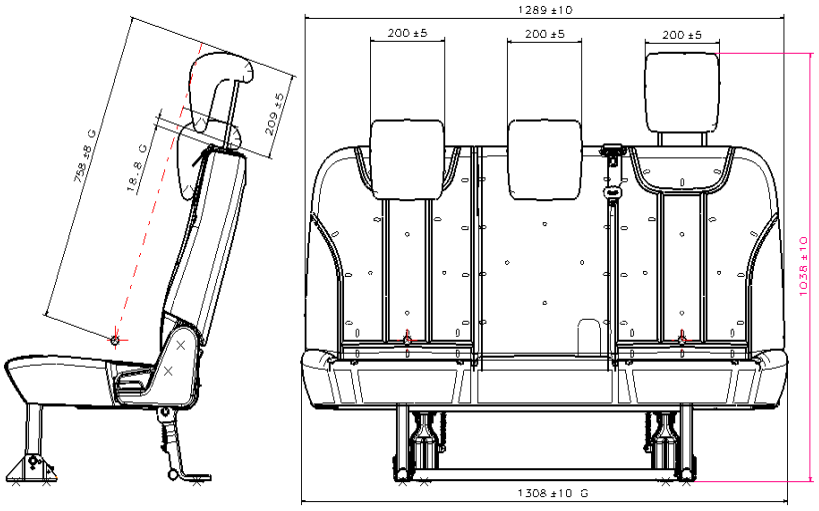

Type: ZY03YKH0
Make: Chongqing Juxian Automobile Components Manufacturing Co., Ltd.

1st row seat adjustment: 190mm(forward: 170mm, rearward: 20mm)

forward 170mm

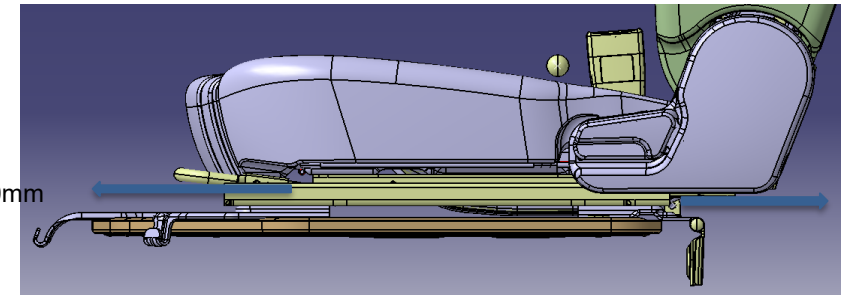

rearward 20mm

1st row seat recliner system

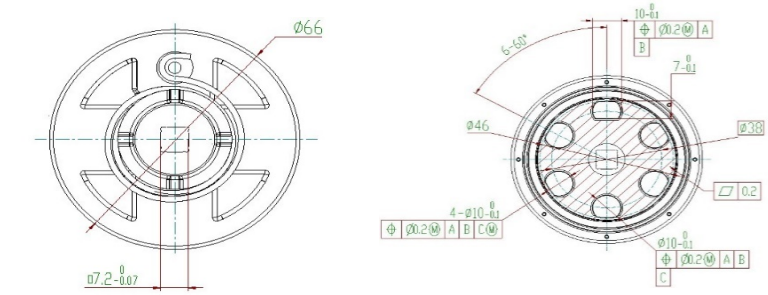

Locked **Opened**

1st row seat adjustment locking system

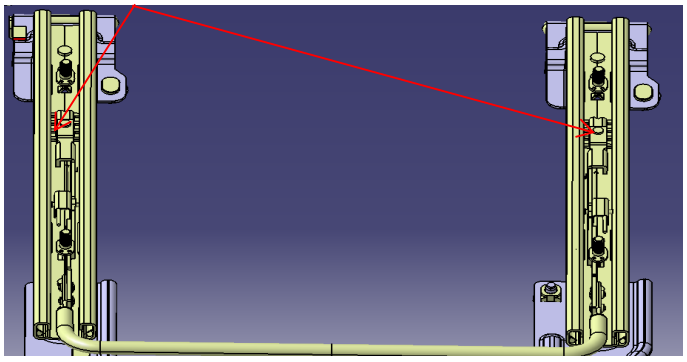

Title : Partial model information document no. V7EV-R29-00	Annex B Page 7
Title : Cab interior view Type : V7EV	Drawing no. : 10 Directive : – Regulation : 29

For 2 seats

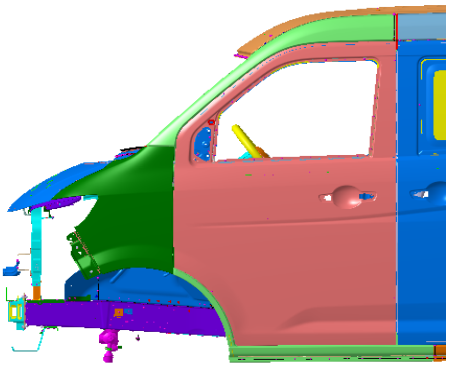

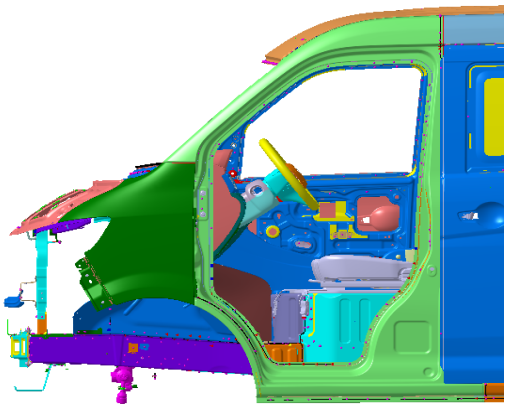

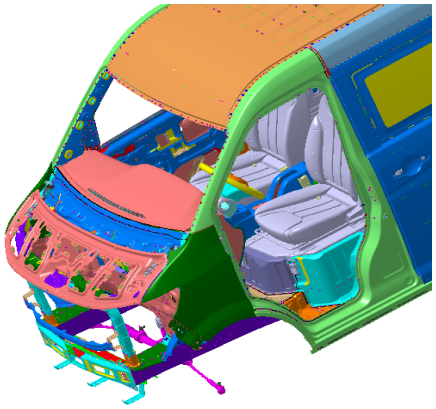

For 5 seats

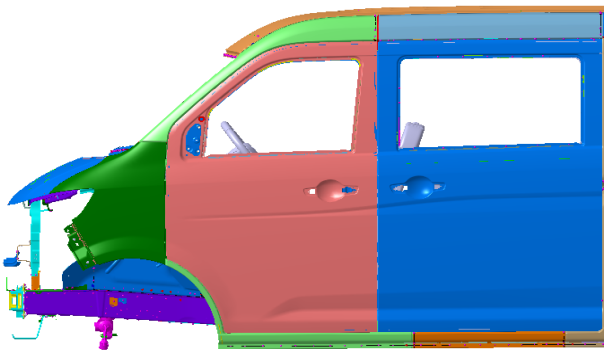

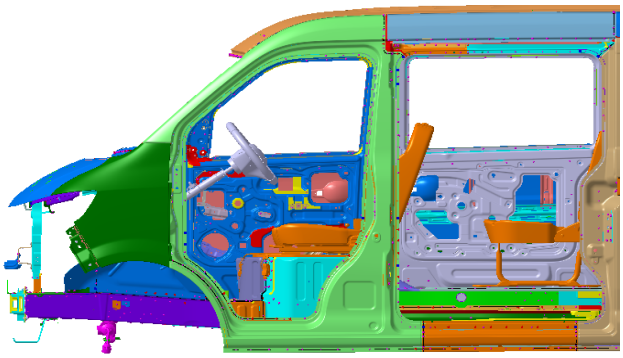

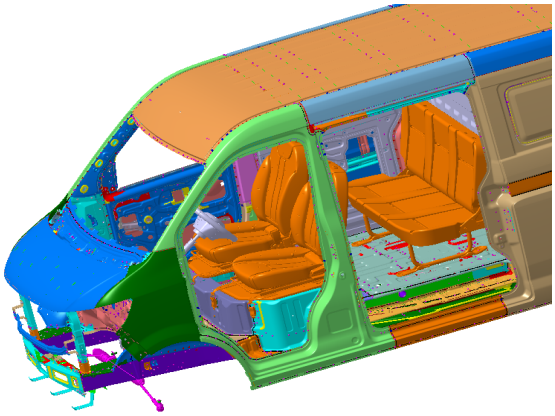

The drawings show left hand drive is symmetrical with right hand drive

Title : Partial model information document no. V7EV-R29-00	Annex B Page 8
Title : Door and latch' s position Type : V7EV	Drawing no. : 11 Directive : – Regulation : 29

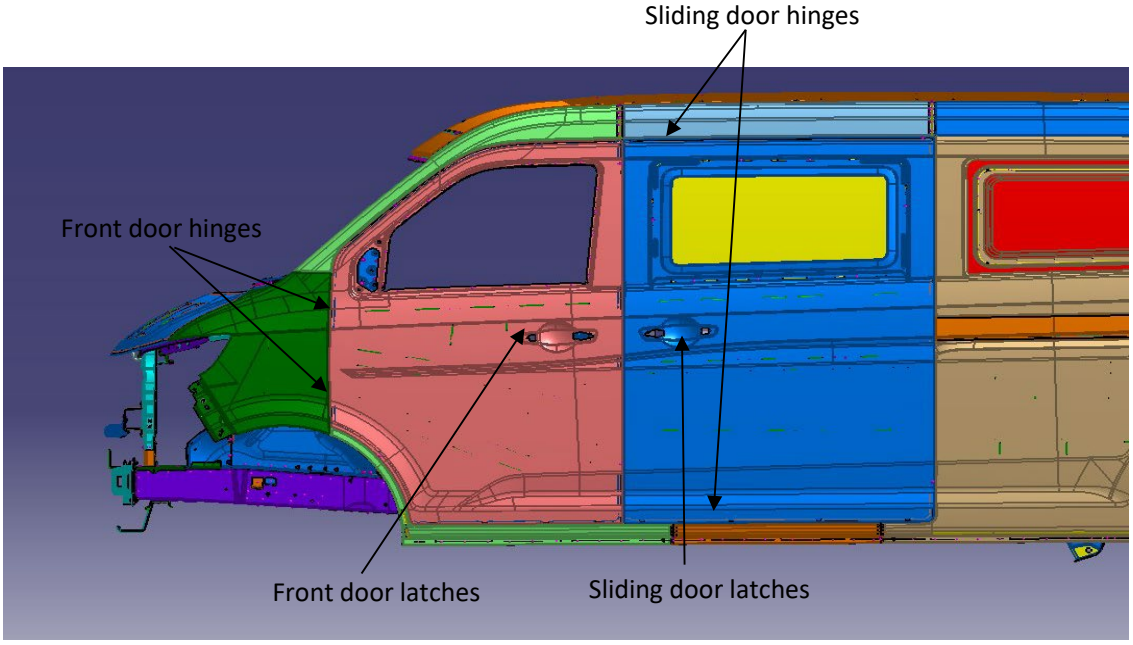

The drawings show left side is symmetrical with right side

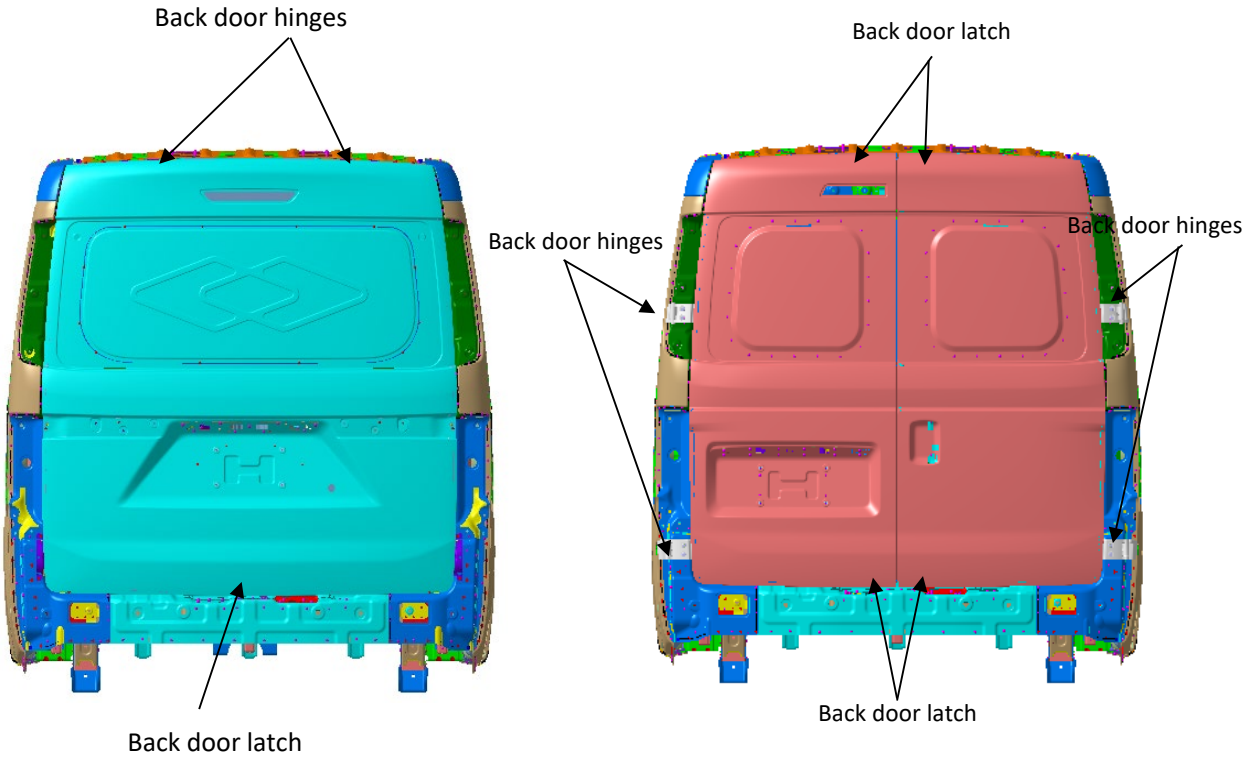

The drawings show left hand drive is the same with right hand drive

Title : Partial model information document no. V7EV-R29-00	Annex B Page 9
Title : Drawing of van cab with its parts Type : V7EV	Drawing no. : 12 Directive : – Regulation : 29

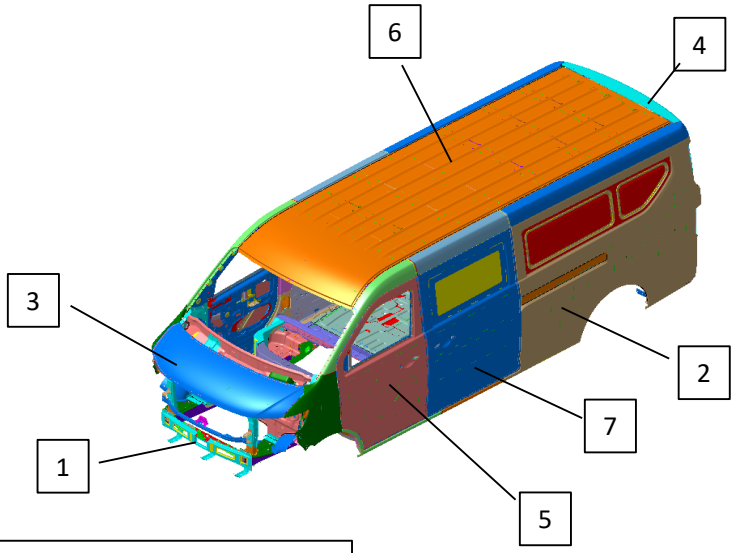

7:CK6205 100V1G2-(slidingdoor)-metal

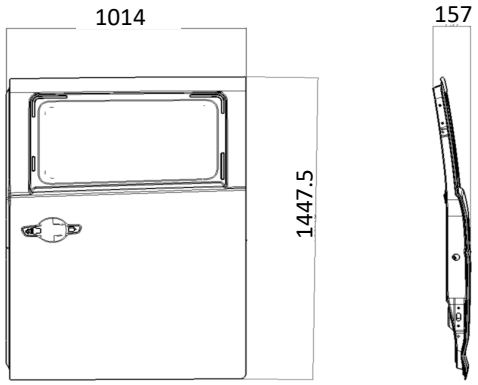

1:CL150-HG02(frame)-metal

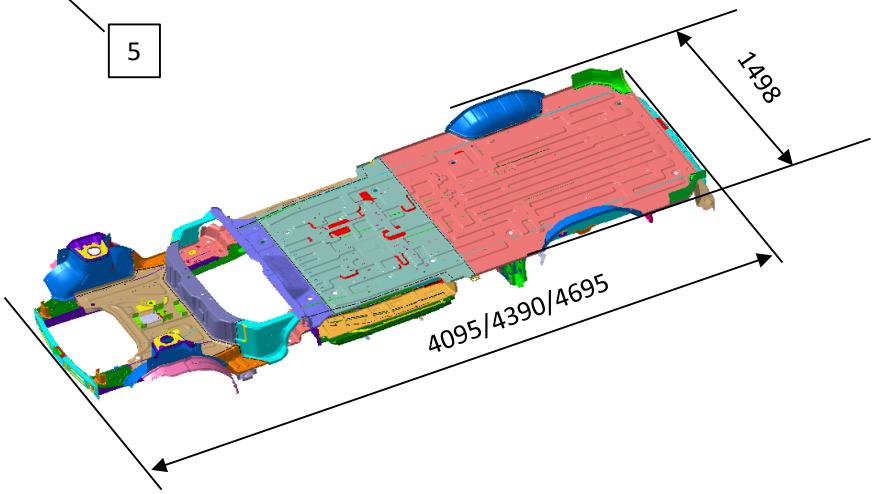

3:CL100-HG01(frontwall)-metal

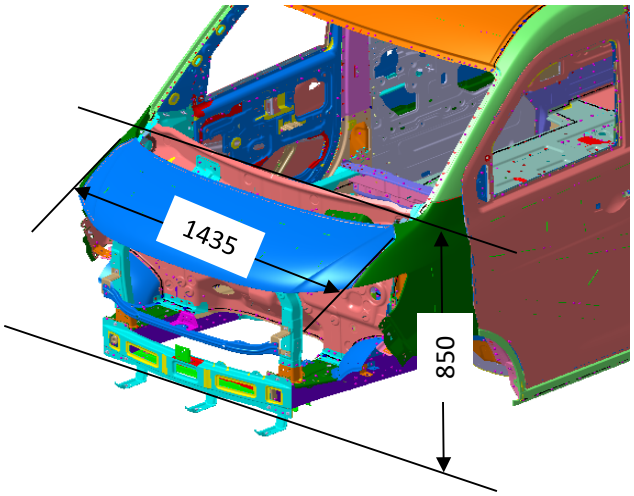

2:CL300-EK01(sidewall)-metal

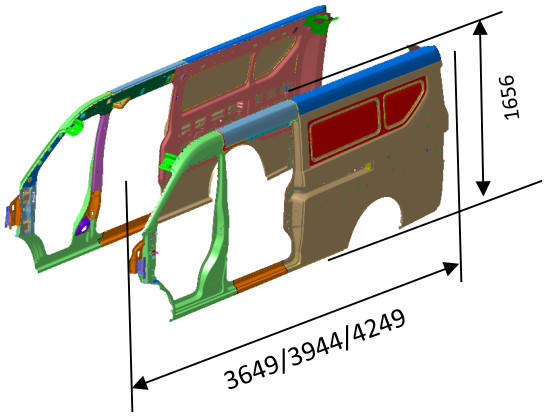

The drawings show left side is the symmetrical with right side

4:CL420-EK01-(backwall)-metal

Hatchback tail door

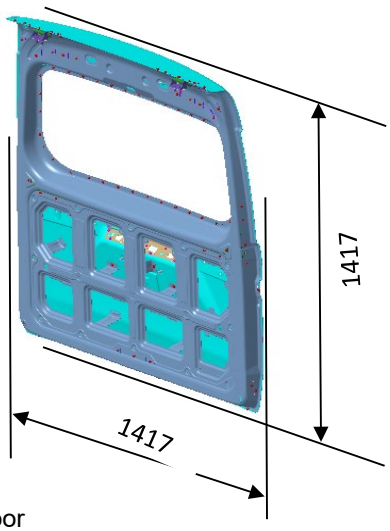

Split tail door

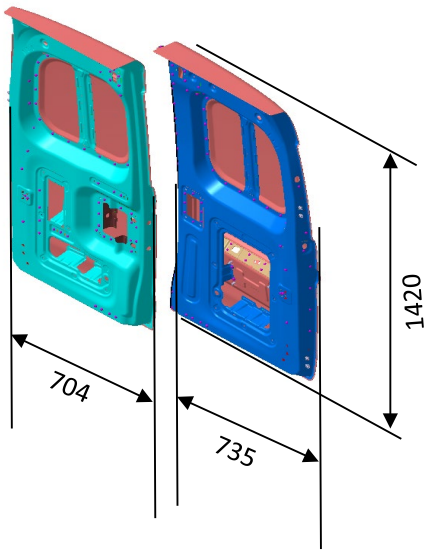

5:CL700-VA01-(frontdoor)-metal

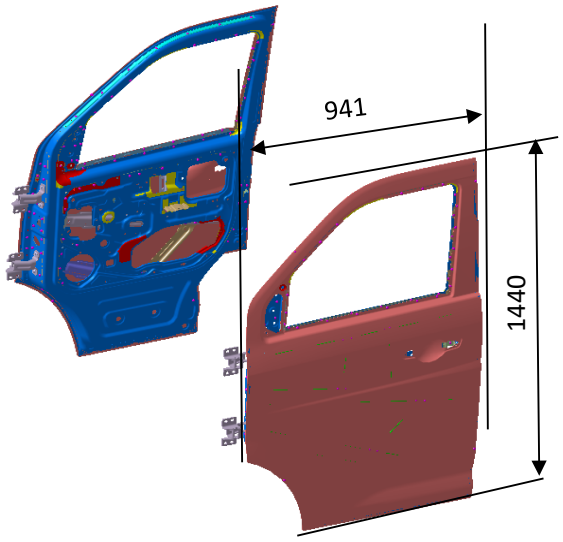

6:CL400-VD01-(topcover)-metal

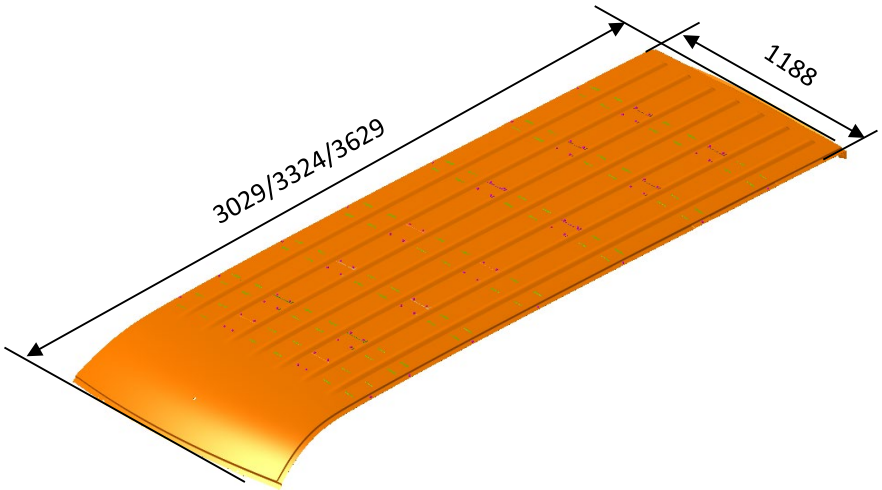

For all variants

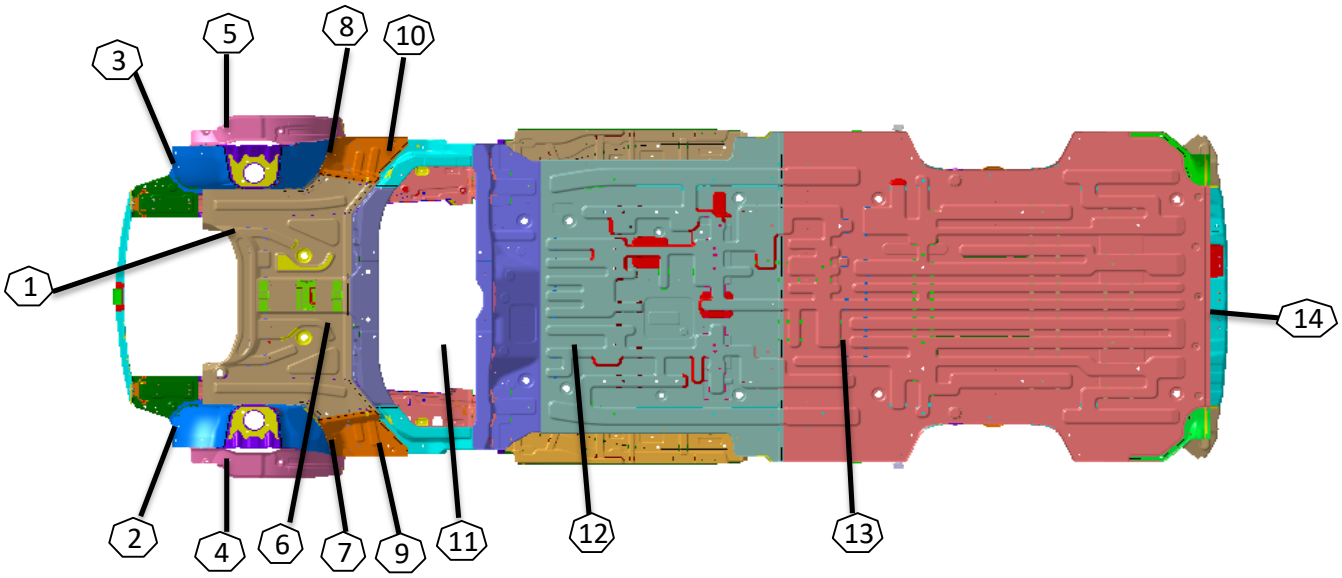

ITEM	Part Name	Material	Thickness(mm)
1	Front Floor	DC01	0.8
2	Front wheel bulge left	DC04	1.0
3	Front wheel bulge right	DC04	1.0
4	Front wheel bulge member left	DC03	1.2
5	Front wheel bulge member right	DC03	1.2
6	Engine bay front panel	DC03	1.2
7	Front sill step member left	DC03	0.8
8	Front sill step member right	DC03	0.8
9	Engine bay side panel left	DC04	1.2
10	Engine bay side panel right	DC04	1.2
11	Rear floor front board	DC03	1.0
12	Rear floor middle board	DC01	0.8
13	Rear floor rear board	DC01	0.8
14	Back panel	DC04	1.0

For all variants

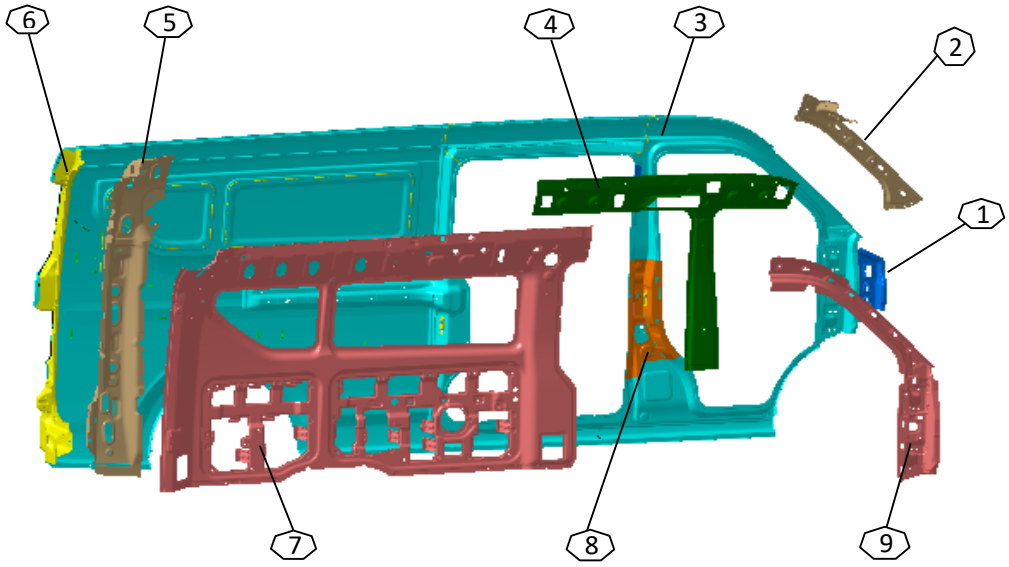

ITEM	Part Name	Material	Thickness(mm)
1	Front panel side stiffeners	DC01	0.8
2	A-PILLAR INR	DC01	0.8
3	body-side sheet	DC06	0.7
4	B-PILLAR INR	DC01	1.0
5	C-pillar reinforcement plate	DC03	1.5
6	Side enclosure rear connecting plate	DC06	1.2
7	C-pillar inner plate	DC04	0.7
8	B-pillar reinforcement plate	DC03	1.5
9	A-pillar reinforcement plate	DC03	1.2

For all variants

Front frame

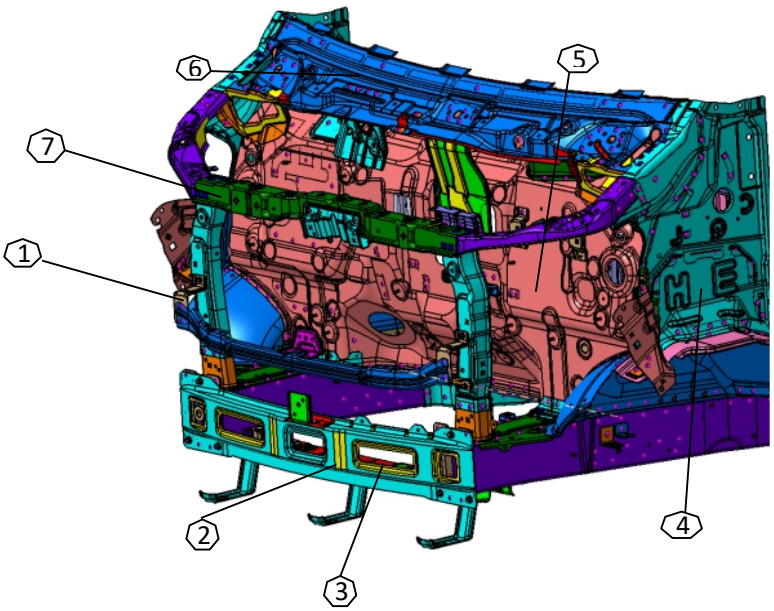

ITEM	Part Name	Material	Thickness(mm)
1	Front Bumper Support Crossbeam Assembly	DC01	1.2
2	Lower Crossbeam Of Water Tank	DC01	1.5
3	Front Anti-collision Beam	HC340/590DP	1.8
4	Front Wall Panel Side Panel	DC01	0.8
5	Front Panel	DC04	0.8
6	Windshield Lower Crossbeam	DC04	0.7
7	Water Tank Upper Crossbeam	DC03	1.2

For all variants

Roof panel

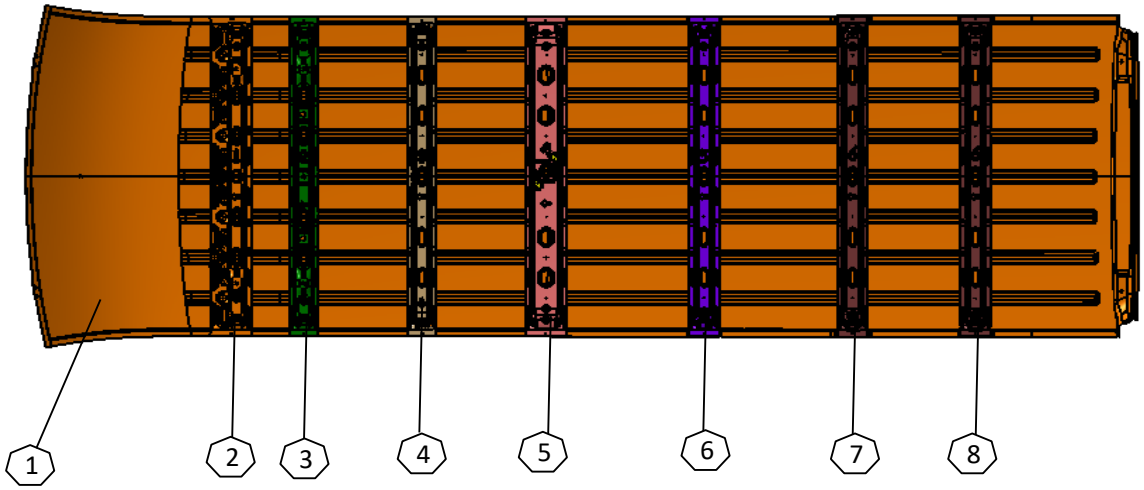

ITEM	Part Name	Material	Thickness(mm)
1	Roof outer plate	DC04	0.7
2	Roof reinforcement Ⅰ	DC01	0.8
3	Roof reinforcement Ⅱ	DC01	0.8
4	Roof reinforcement Ⅲ	DC01	0.8
5	Roof reinforcement Ⅳ	DC01	1.2
6	Roof reinforcement Ⅴ	DC01	0.8
7	Roof reinforcement Ⅵ	DC01	0.8
8	Roof reinforcement Ⅵ	DC01	0.8

For all variants

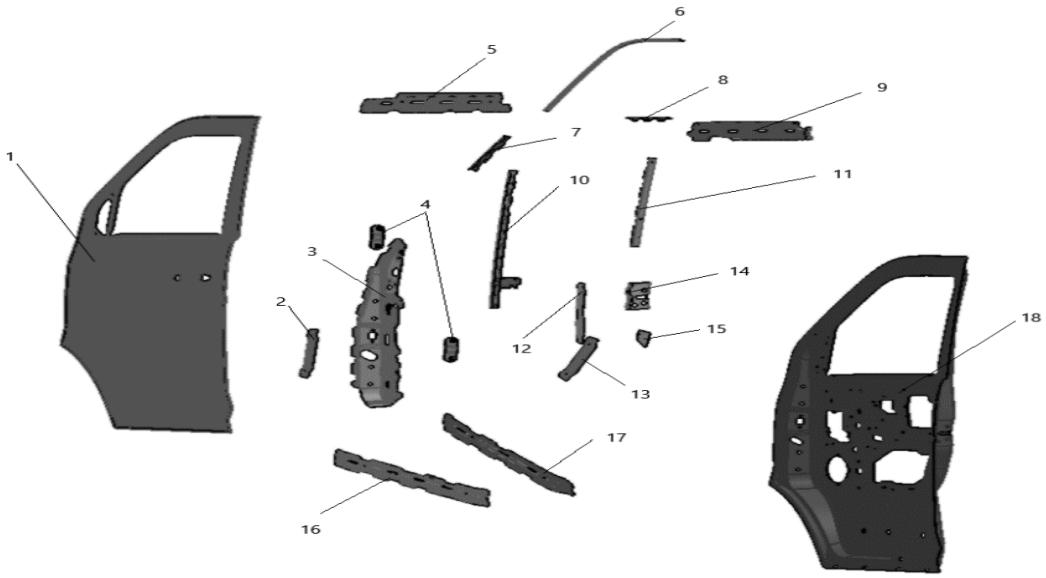

ITEM	Part Name	Material	Thickness
1	Front Door Uter Skin	DC03	0.7
2	Front Door Longitudinal Reinforcement	DC01	0.7
3	Front Door hinge Reinforcement	B280VK	1.5
4	Front Door hinge Reinforcement Assembly	DC01	1.5
5	Front Door Uter Skin Reinforcement	DC01	0.7
6	Front Door Sealing Strip Groove	SPCC	0.6
7	Front Door Window Frame Upper Section	DC01	0.7
8	Front Door Window Frame Lower Section	DC01	0.7
9	Internal front door reinforcement	DC01	0.7
10	Front sash assembly, front door	DC01	0.7
11	Front window frame back end	DC01	0.7
12	Front door support panel	DC01	1
13	Front door rear longitudinal stiffeners	DC01	0.7
14	Front door lock reinforcement	DC01	1
15	Front door rear rail stiffener plate	DC01	1.2
16	Upper front beam	DC01	0.7
17	Front door crash beam	DC01	0.8
18	Front DoorInner Skin	DC06	0.7

For all variants

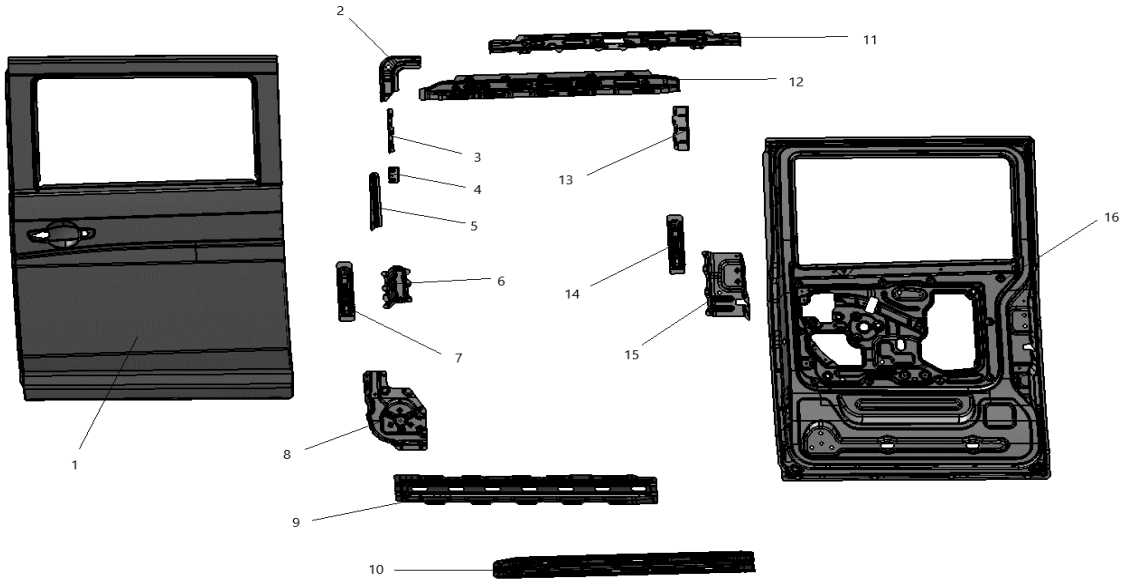

ITEM	Part Name	Material	Thickness
1	Skin the back door	DC03	0.7
2	Rear door hinge reinforced panels	DC01	0.8
3	Rear door glass front rail upper section	DC01	0.7
4	Rear door glass front rail lower section	DC01	1
5	Rear longitudinal stiffeners	DC01	1
6	Rear door inner skin front stiffener	DC01	2
7	Rear door leather support panel	DC01	0.7
8	Rear door lower hinge reinforced panels	DC01	1.5
9	Rear door collision beam	DC01	0.7
10	Rear door leather support plate II	DC01	0.8
11	Rear door inner skin reinforcement	DC01	0.8
12	Rear door skin reinforcement	DC01	0.8
13	Rear door glass on rail section	DC01	0.7
14	Rear door leather support panel	DC01	0.7
15	Rear door lock body reinforcement plate	DC01	1
16	Inner rear door skin left	DC04	0.7

For all variants

Bottom view

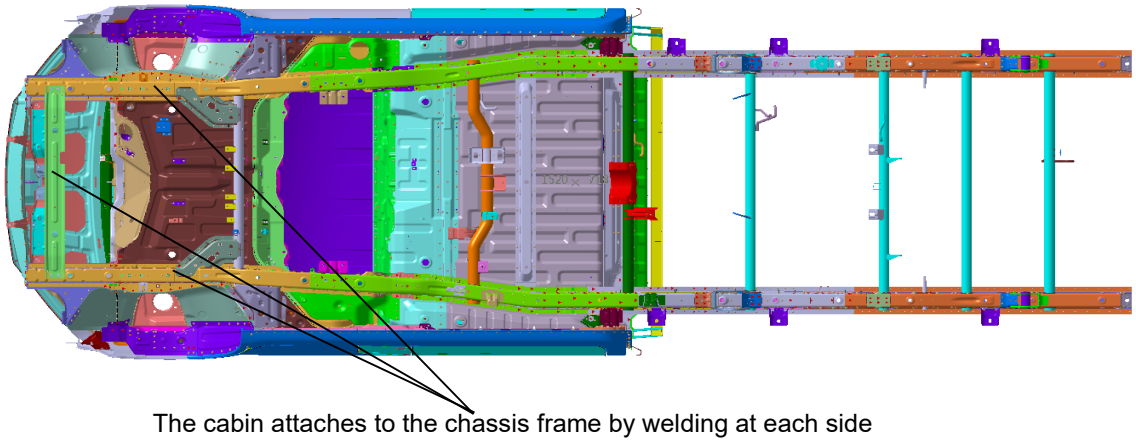

The cabin attaches to the chassis frame by welding at each side

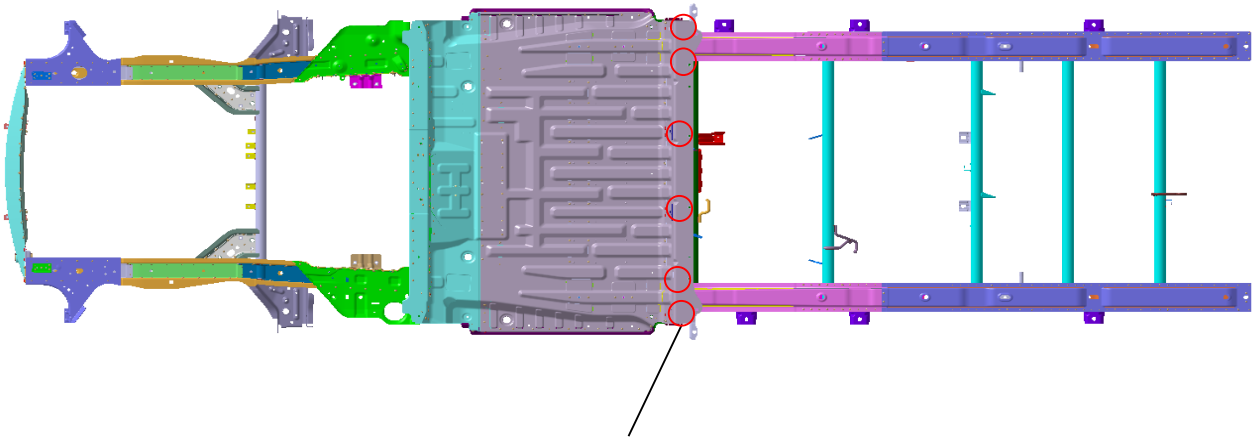

The cabin connectes to the cargo box by 6 bolts

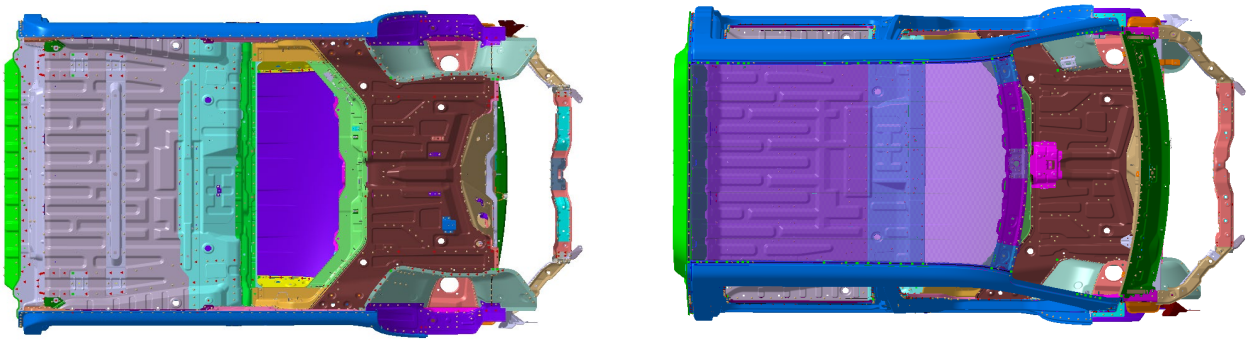

Top view